MKTG SPEC, ELO-STAND-10.1IN-GY-R

E160104

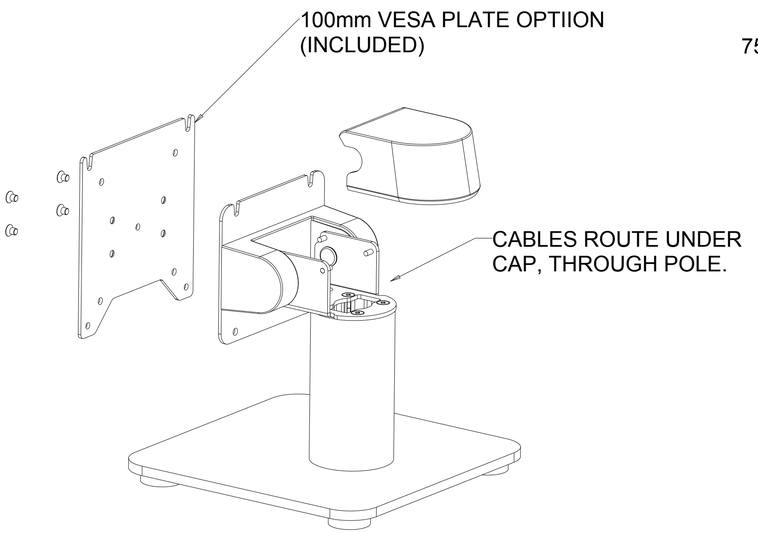

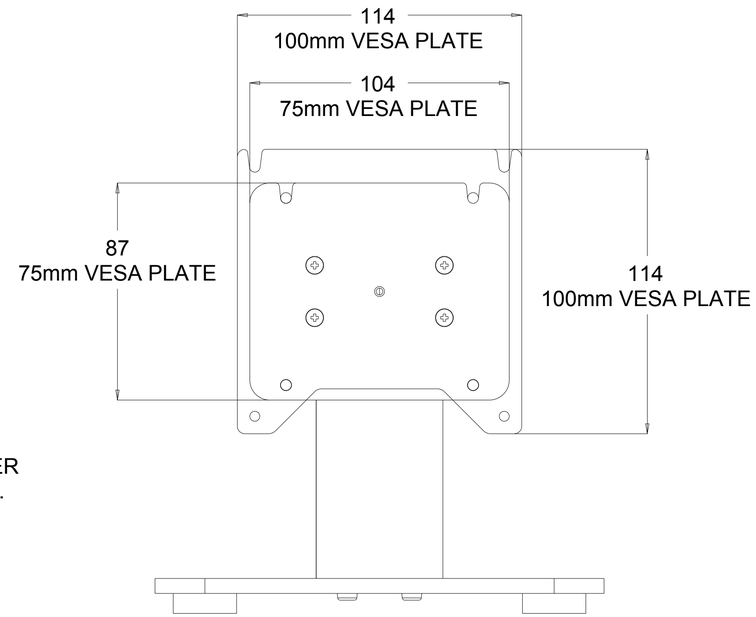

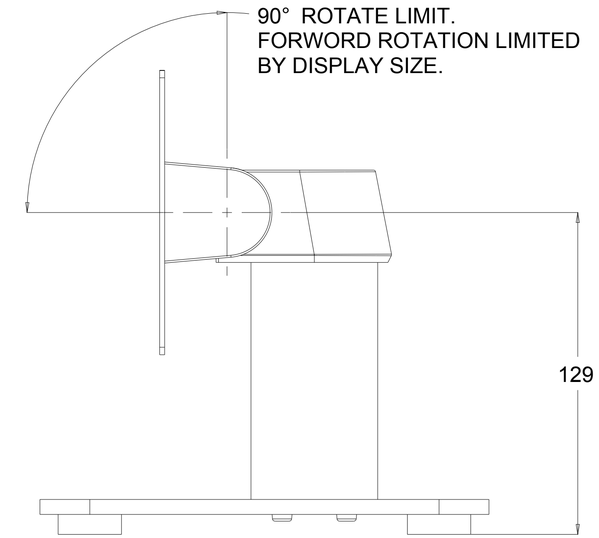

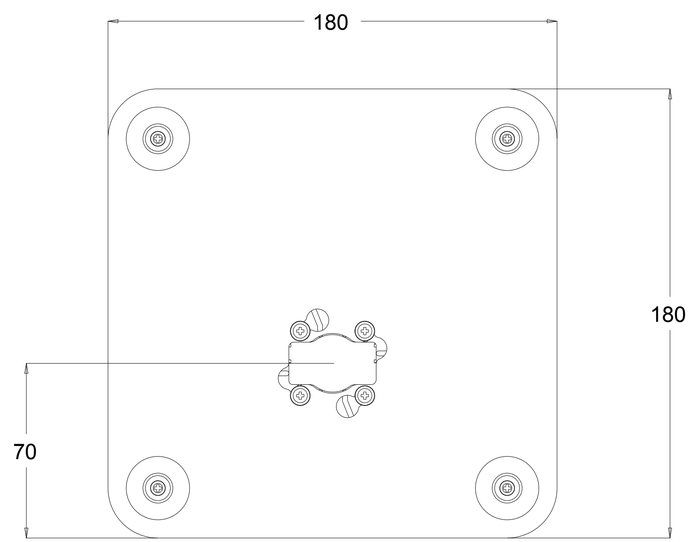

DIMENSIONS ARE IN MILLIMETERS

SHEET 1 OF 1

MS601763
DATE: 09/15/15
REV: A